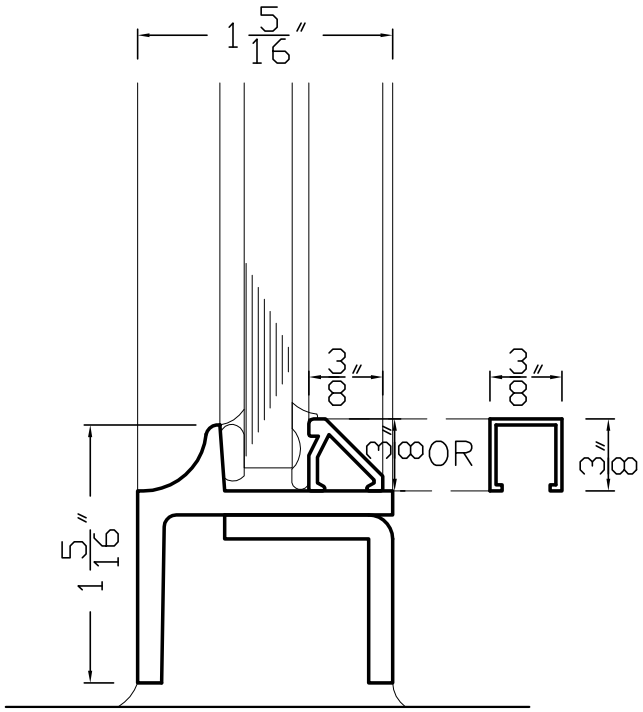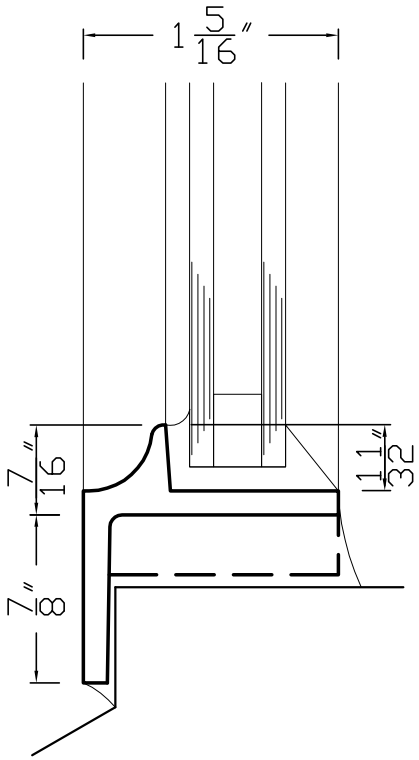HISTORIC / INDUSTRIAL FIXED FRAME – SILL DETAILS